1957 STUDEBAKER SILVER HAWK (57H C)

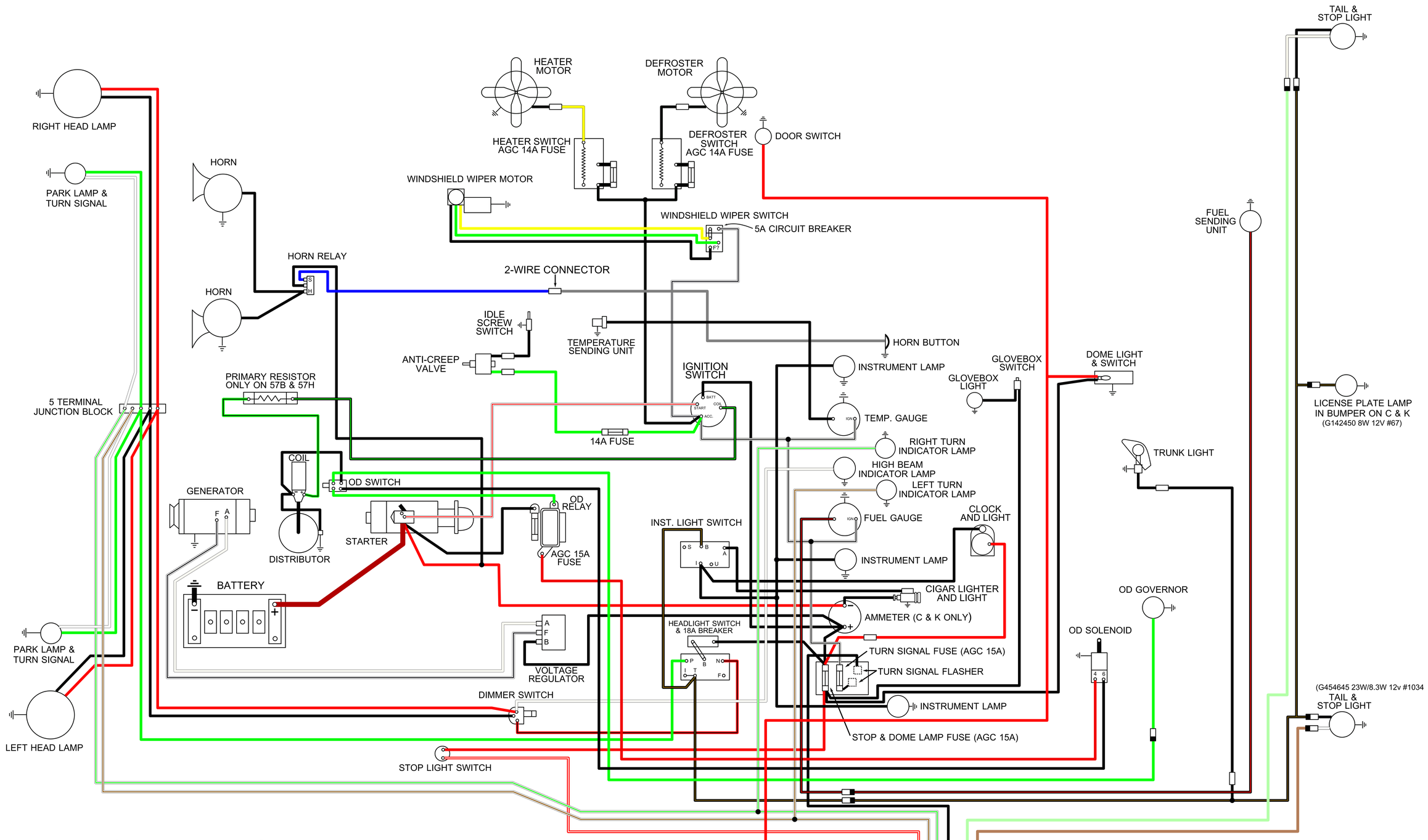

- BLACK
- WHITE
- RED
- BLUE
- GREEN
- LIGHT GREEN
- YELLOW
- TAN
- GRAY
- RED & BLACK
- RED & WHITE
- BLACK & WHITE
- BLACK & GREEN
- BLACK & BROWN
- BLACK & RED
- WHITE & BLACK
- WHITE & RED
- WHITE & GREEN
- WHITE & BROWN
- YELLOW & RED
- GREEN & BLACK

- CONNECTOR AS PART OF HARNESS
- 192548 LOOSE CONNECTOR
- FUSE
- GROUND CONNECTION
- RESISTOR

FUSES		BULBS	
FUSE PANEL 15A X2	TURN SIGNAL	1073	REVERSE LIGHT
	REVERSE LIGHT	1445	CIGAR LIGHTER
	STOP LIGHT	57	CLOCK LIGHT
	DOME LIGHT	1004	DOME LIGHT
7.5A	RADIO	57	GLOVE BOX LIGHT
14A	HEATER	4405	SPOTLIGHT
3A	CLOCK	1004	HANDBRAKE INDICATOR
4A	UNDERHOOD LIGHT	5400	HEADLIGHT SINGLE
14A	ANTI-CREEP	1445	HIGH BEAM INDICATOR
20A	AIR CON.	1445	IGN. LOCK LIGHT
15A	OVERDRIVE	57	INSTRUMENT LIGHTS
7.5A	SPOTLIGHT	67	LICENSE PLATE LIGHT
		1034	PARKING LIGHT
		1891	RADIO DIAL LIGHT
		1445	SHIFTER LIGHT
		1034	STOP LIGHT
		1034	TAIL LIGHT
		1445	TELL TALE LIGHTS
		67	TRUNK LIGHT
		1445	TURN SIGNAL INDICATOR
		1034	TURN SIGNAL FRONT
		1034	TURN SIGNAL REAR

CINCO

1957 STUDEBAKER SILVER HAWK (57H C)

MAIN POWER

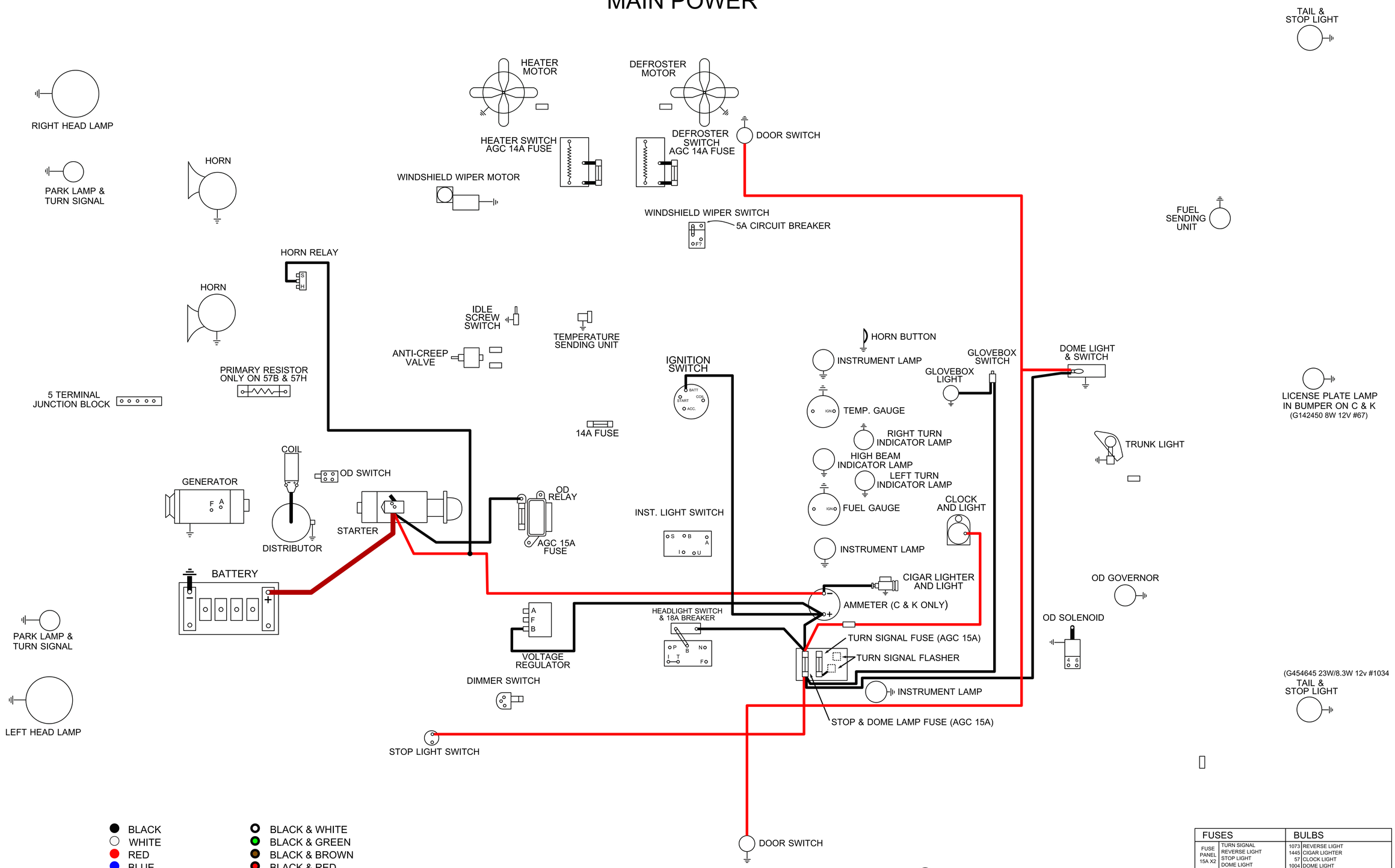

FUSES		BULBS	
FUSE PANEL 15A X2	TURN SIGNAL	1073	REVERSE LIGHT
	REVERSE LIGHT	1445	CIGAR LIGHTER
	STOP LIGHT	57	CLOCK LIGHT
	DOME LIGHT	1004	DOME LIGHT
7.5A	RADIO	57	GLOVE BOX LIGHT
14A	HEATER	4405	SPOTLIGHT
3A	CLOCK	1004	HANDBRAKE INDICATOR
4A	UNDERHOOD LIGHT	5400	HEADLIGHT SINGLE
14A	ANTI-CREEP	1445	HIGH BEAM INDICATOR
20A	AIR CON.	1445	IGN. LOCK LIGHT
15A	OVERDRIVE	57	INSTRUMENT LIGHTS
7.5A	SPOTLIGHT	67	LICENSE PLATE LIGHT
		1034	PARKING LIGHT
		1891	RADIO DIAL LIGHT
		1445	SHIFTER LIGHT
		1034	STOP LIGHT
		1034	TAIL LIGHT
		1445	TELL TALE LIGHTS
		67	TRUNK LIGHT
		1445	TURN SIGNAL INDICATOR
		1034	TURN SIGNAL FRONT
		1034	TURN SIGNAL REAR

CINCO

1957 STUDEBAKER SILVER HAWK (57H C)

ACCESSORY POWER

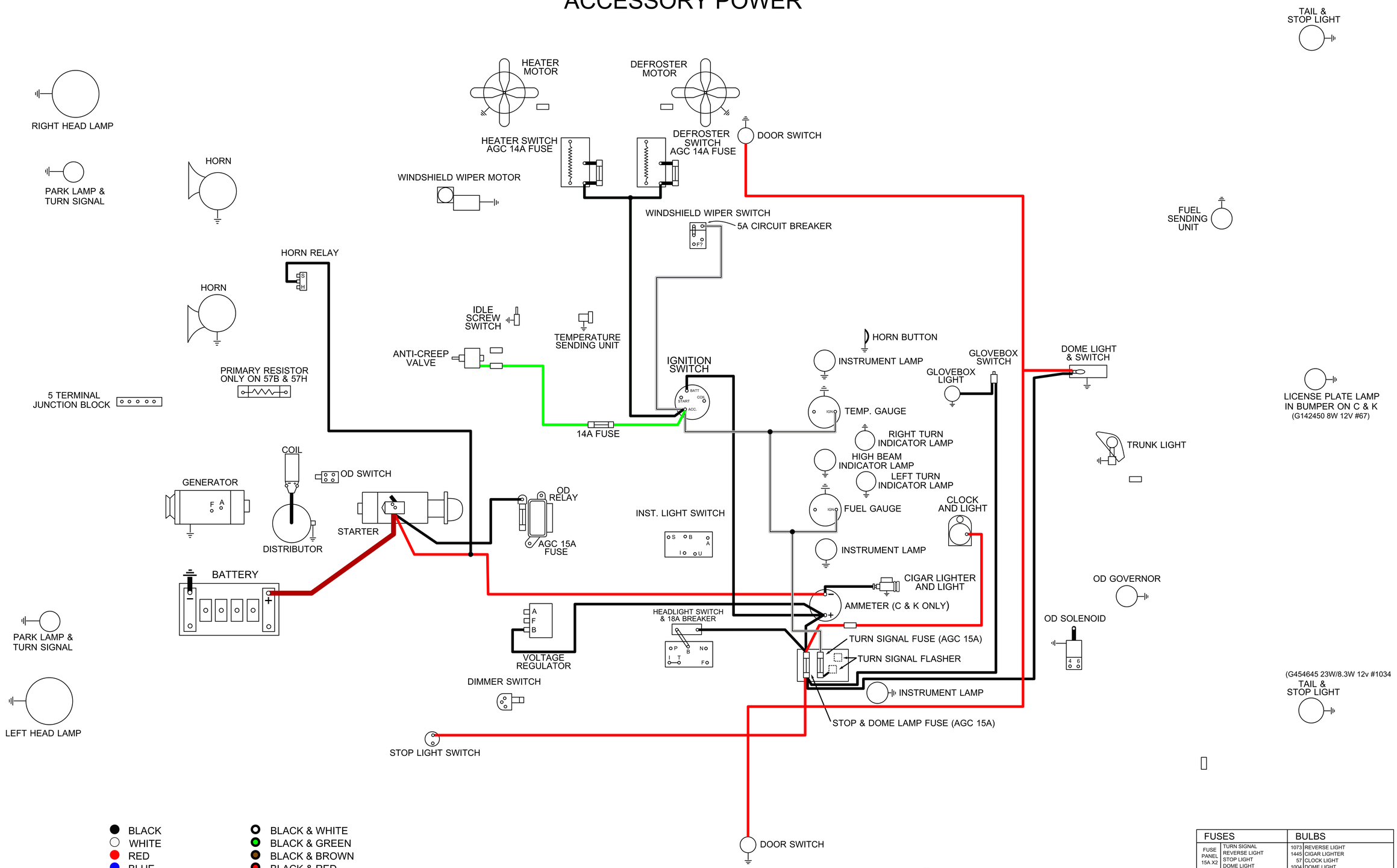

FUSES		BULBS	
FUSE PANEL 15A X2	TURN SIGNAL	1073	REVERSE LIGHT
	REVERSE LIGHT	1445	CIGAR LIGHTER
	STOP LIGHT	57	CLOCK LIGHT
	DOME LIGHT	1004	DOME LIGHT
7.5A	RADIO	57	GLOVE BOX LIGHT
14A	HEATER	4405	SPOTLIGHT
3A	CLOCK	1004	HANDBRAKE INDICATOR
4A	UNDERHOOD LIGHT	5400	HEADLIGHT SINGLE
14A	ANTI-CREEP	1445	HIGH BEAM INDICATOR
20A	AIR CON.	1445	IGN. LOCK LIGHT
15A	OVERDRIVE	57	INSTRUMENT LIGHTS
7.5A	SPOTLIGHT	67	LICENSE PLATE LIGHT
		1034	PARKING LIGHT
		1891	RADIO DIAL LIGHT
		1445	SHIFTER LIGHT
		1034	STOP LIGHT
		1034	TAIL LIGHT
		1445	TELL TALE LIGHTS
		67	TRUNK LIGHT
		1445	TURN SIGNAL INDICATOR
		1034	TURN SIGNAL FRONT
		1034	TURN SIGNAL REAR

CINCO

1957 STUDEBAKER SILVER HAWK (57H C)

STARTER

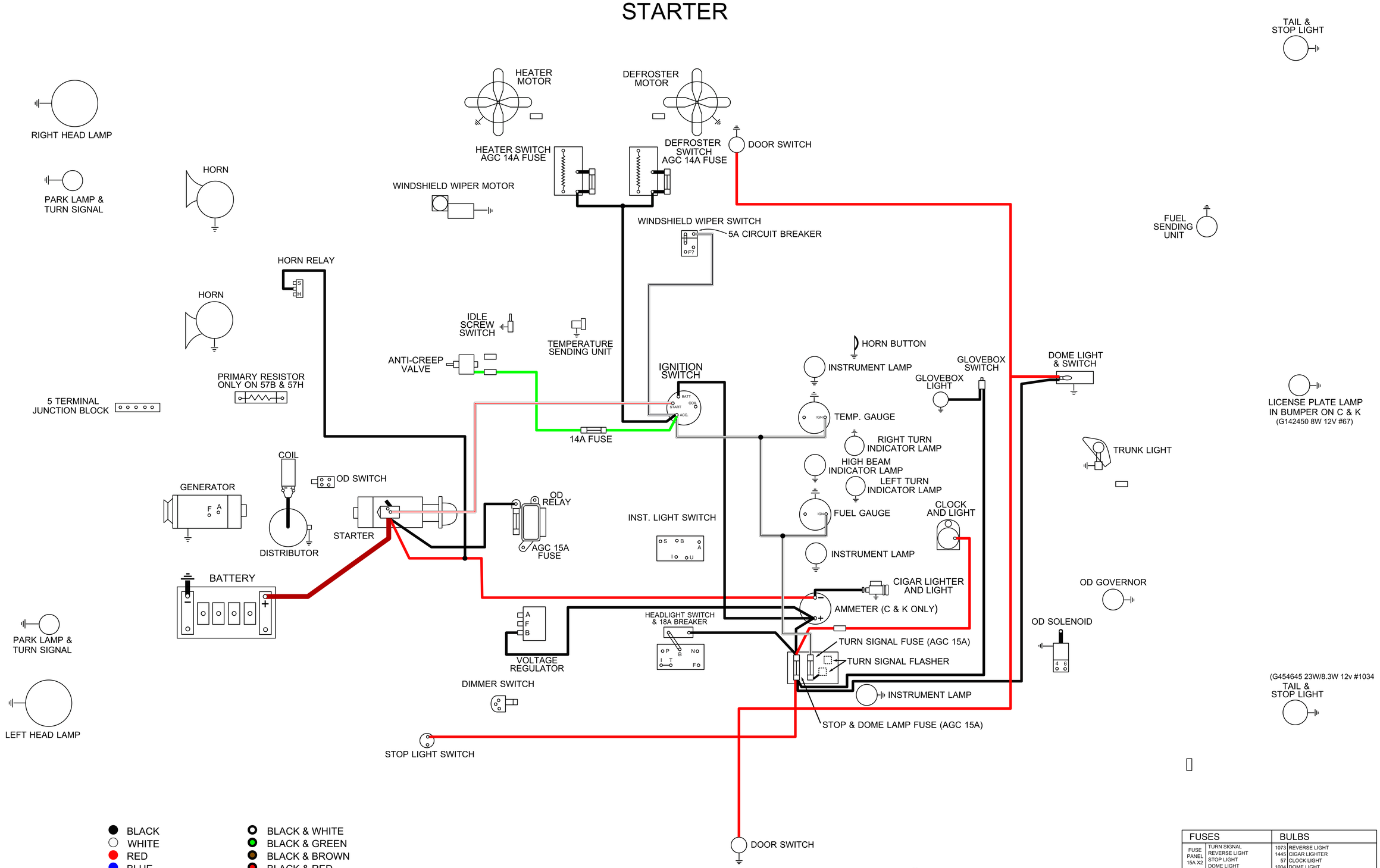

FUSES		BULBS	
FUSE PANEL 15A X2	TURN SIGNAL	1073	REVERSE LIGHT
	REVERSE LIGHT	1445	CIGAR LIGHTER
	STOP LIGHT	57	CLOCK LIGHT
	DOME LIGHT	1004	DOME LIGHT
7.5A	RADIO	57	GLOVE BOX LIGHT
14A	HEATER	4405	SPOTLIGHT
3A	CLOCK	1004	HANDBRAKE INDICATOR
4A	UNDERHOOD LIGHT	5400	HEADLIGHT SINGLE
14A	ANTI-CREEP	1445	HIGH BEAM INDICATOR
20A	AIR CON.	1445	IGN. LOCK LIGHT
15A	OVERDRIVE	57	INSTRUMENT LIGHTS
7.5A	SPOTLIGHT	67	LICENSE PLATE LIGHT
		1034	PARKING LIGHT
		1891	RADIO DIAL LIGHT
		1445	SHIFTER LIGHT
		1034	STOP LIGHT
		1034	TAIL LIGHT
		1445	TELL TALE LIGHTS
		67	TRUNK LIGHT
		1445	TURN SIGNAL INDICATOR
		1034	TURN SIGNAL FRONT
		1034	TURN SIGNAL REAR

CINCO

1957 STUDEBAKER SILVER HAWK (57H C)

IGNITION SYSTEM

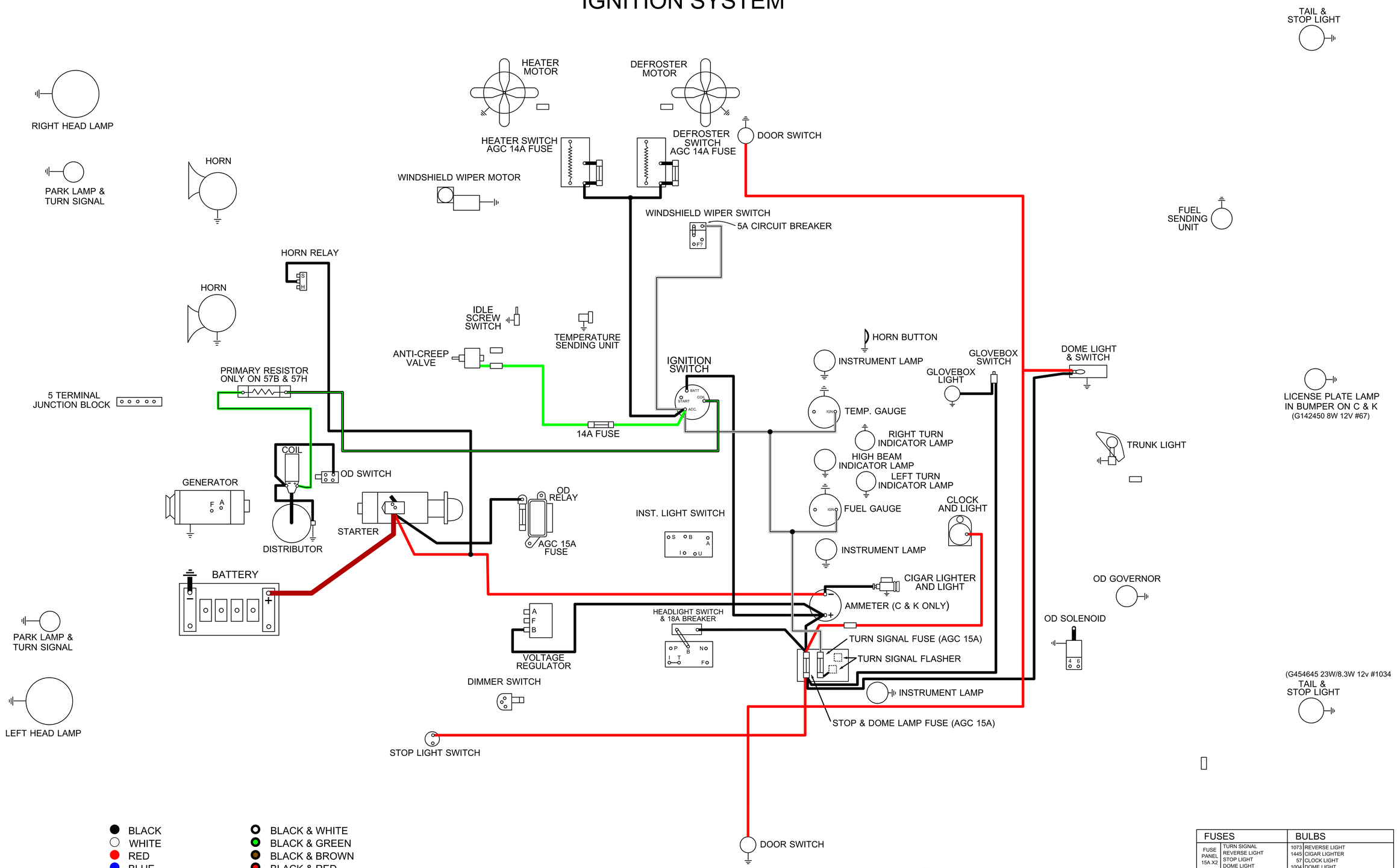

- BLACK
- WHITE
- RED
- BLUE
- GREEN
- LIGHT GREEN
- YELLOW
- TAN
- GRAY
- RED & BLACK
- RED & WHITE
- BLACK & WHITE
- BLACK & GREEN
- BLACK & BROWN
- BLACK & RED
- WHITE & BLACK
- WHITE & RED
- WHITE & GREEN
- WHITE & BROWN
- YELLOW & RED
- GREEN & BLACK

- CONNECTOR AS PART OF HARNESS
- 192548 LOOSE CONNECTOR
- FUSE
- GROUND CONNECTION
- RESISTOR

FUSES		BULBS	
FUSE PANEL 15A X2	TURN SIGNAL	1073	REVERSE LIGHT
	REVERSE LIGHT	1445	CIGAR LIGHTER
	STOP LIGHT	57	CLOCK LIGHT
	DOME LIGHT	1004	DOME LIGHT
7.5A	RADIO	57	GLOVE BOX LIGHT
14A	HEATER	4405	SPOTLIGHT
3A	CLOCK	1004	HANDBRAKE INDICATOR
4A	UNDERHOOD LIGHT	5400	HEADLIGHT SINGLE
14A	ANTI-CREEP	1445	HIGH BEAM INDICATOR
20A	AIR CON.	1445	IGN. LOCK LIGHT
15A	OVERDRIVE	57	INSTRUMENT LIGHTS
7.5A	SPOTLIGHT	67	LICENSE PLATE LIGHT
		1034	PARKING LIGHT
		1891	RADIO DIAL LIGHT
		1445	SHIFTER LIGHT
		1034	STOP LIGHT
		1034	TAIL LIGHT
		1445	TELL TALE LIGHTS
		67	TRUNK LIGHT
		1445	TURN SIGNAL INDICATOR
		1034	TURN SIGNAL FRONT
		1034	TURN SIGNAL REAR

CINCO

1957 STUDEBAKER SILVER HAWK (57H C)

CHARGING SYSTEM

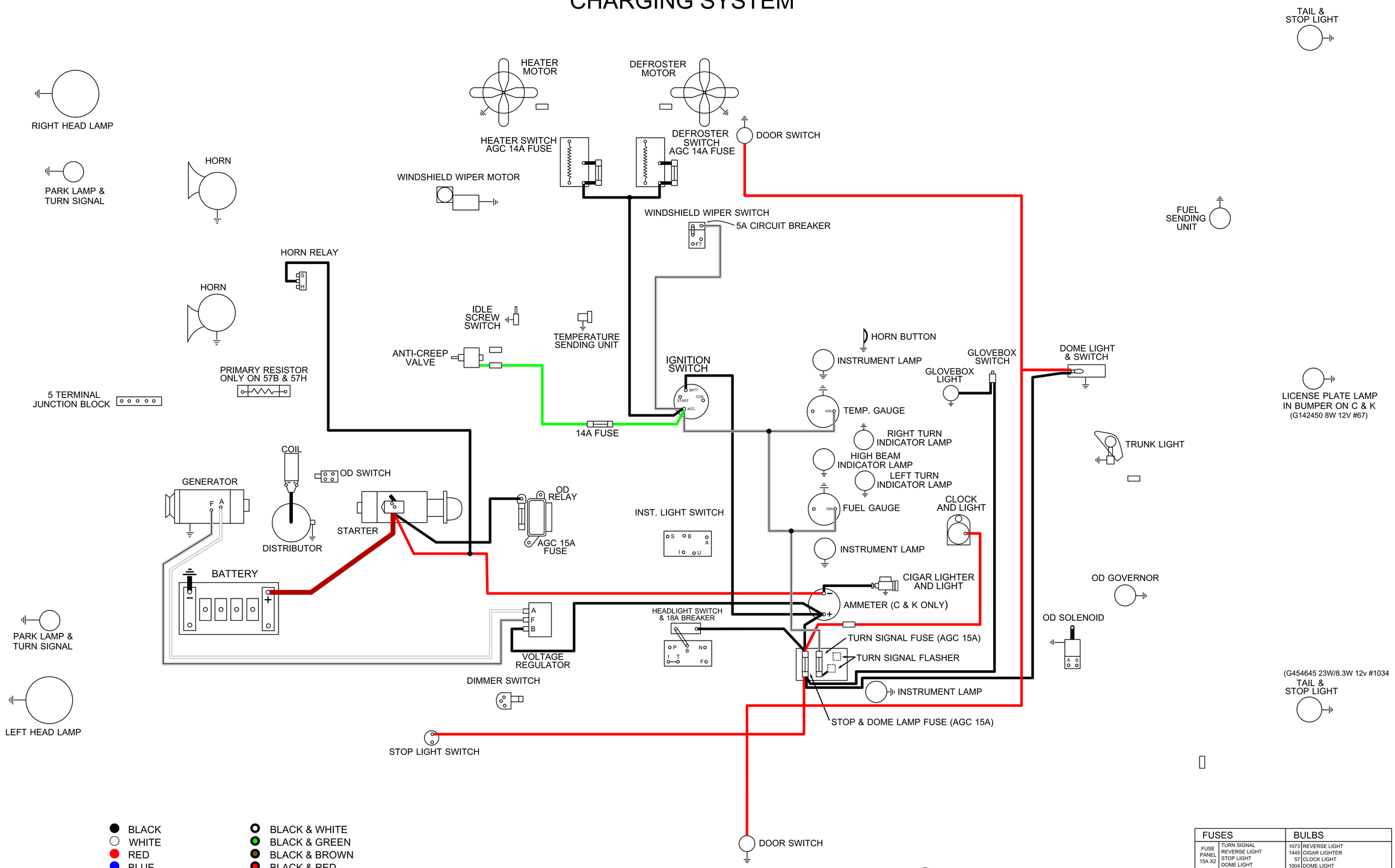

FUSES		BULBS	
FUSE PANEL 15A X2	TURN SIGNAL	1073	REVERSE LIGHT
	REVERSE LIGHT	1445	CIGAR LIGHTER
	STOP LIGHT	57	CLOCK LIGHT
	DOME LIGHT	1004	DOME LIGHT
7.5A	RADIO	57	GLOVE BOX LIGHT
14A	HEATER	4405	SPOTLIGHT
3A	CLOCK	1004	HANDBRAKE INDICATOR
4A	UNDERHOOD LIGHT	5400	HEADLIGHT SINGLE
14A	ANTI-CREEP	1445	HIGH BEAM INDICATOR
20A	AIR CON.	1445	IGN. LOCK LIGHT
15A	OVERDRIVE	57	INSTRUMENT LIGHTS
7.5A	SPOTLIGHT	67	LICENSE PLATE LIGHT
		1034	PARKING LIGHT
		1891	RADIO DIAL LIGHT
		1445	SHIFTER LIGHT
		1034	STOP LIGHT
		1034	TAIL LIGHT
		1445	TELL TALE LIGHTS
		67	TRUNK LIGHT
		1445	TURN SIGNAL INDICATOR
		1034	TURN SIGNAL FRONT
		1034	TURN SIGNAL REAR

CINCO

1957 STUDEBAKER SILVER HAWK (57H C)

HEADLIGHTS

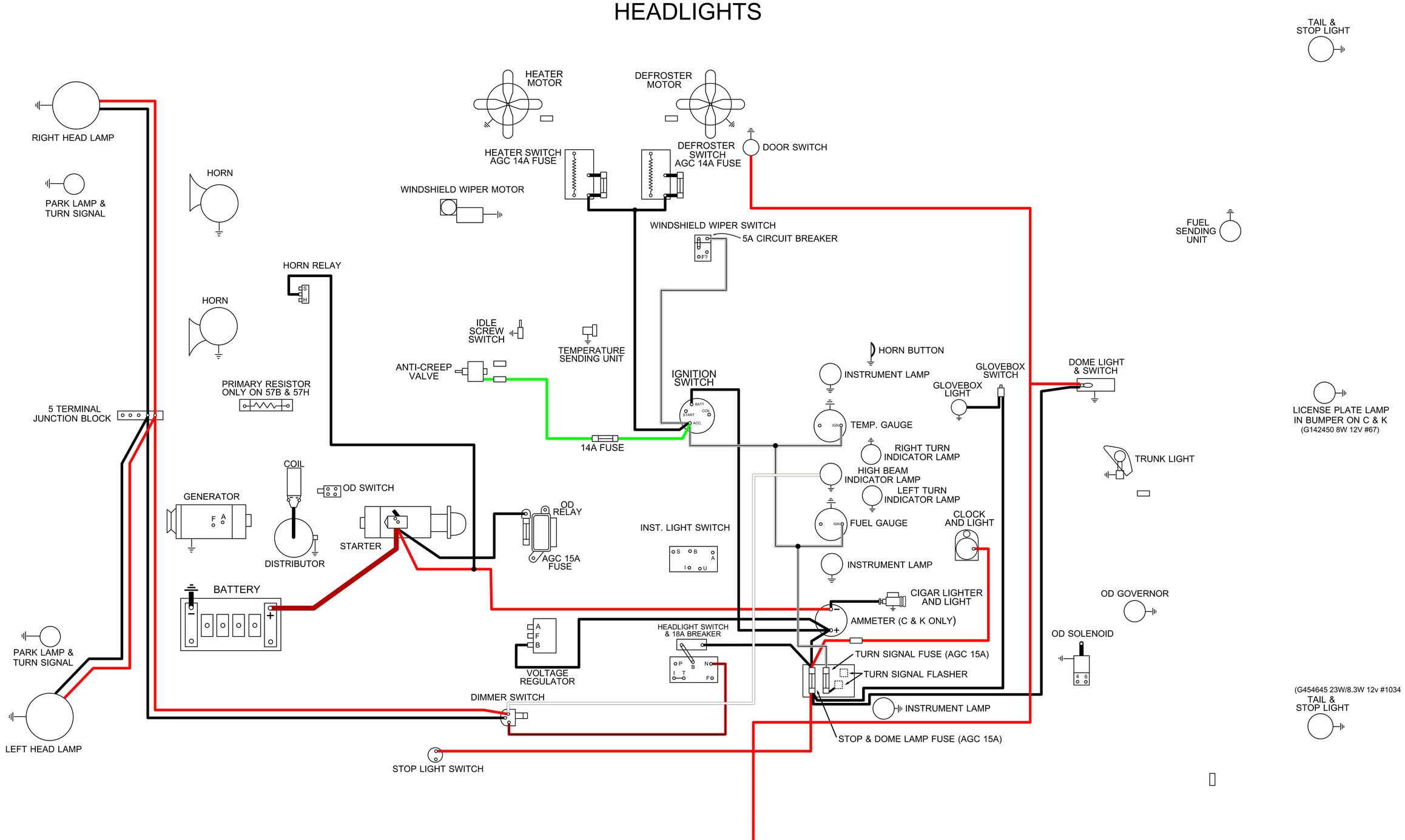

- BLACK
- WHITE
- RED
- BLUE
- GREEN
- LIGHT GREEN
- YELLOW
- TAN
- GRAY
- RED & BLACK
- RED & WHITE
- BLACK & WHITE
- BLACK & GREEN
- BLACK & BROWN
- BLACK & RED
- WHITE & BLACK
- WHITE & RED
- WHITE & GREEN
- WHITE & BROWN
- YELLOW & RED
- GREEN & BLACK

- CONNECTOR AS PART OF HARNESS
- 192548 LOOSE CONNECTOR
- FUSE
- GROUND CONNECTION
- RESISTOR

FUSES		BULBS	
FUSE PANEL 15A X2	TURN SIGNAL	1073	REVERSE LIGHT
	REVERSE LIGHT	1445	CIGAR LIGHTER
	STOP LIGHT	57	CLOCK LIGHT
	DOME LIGHT	1004	DOME LIGHT
7.5A	RADIO	57	GLOVE BOX LIGHT
14A	HEATER	4405	SPOTLIGHT
3A	CLOCK	1004	HANDBRAKE INDICATOR
4A	UNDERHOOD LIGHT	5400	HEADLIGHT SINGLE
14A	ANTI-CREEP	1445	HIGH BEAM INDICATOR
20A	AIR CON.	1445	IGN. LOCK LIGHT
15A	OVERDRIVE	57	INSTRUMENT LIGHTS
7.5A	SPOTLIGHT	67	LICENSE PLATE LIGHT
		1034	PARKING LIGHT
		1891	RADIO DIAL LIGHT
		1445	SHIFTER LIGHT
		1034	STOP LIGHT
		1034	TAIL LIGHT
		1445	TELL TALE LIGHTS
		67	TRUNK LIGHT
		1445	TURN SIGNAL INDICATOR
		1034	TURN SIGNAL FRONT
		1034	TURN SIGNAL REAR

CINCO

1957 STUDEBAKER SILVER HAWK (57H C)

RUNNING LIGHTS

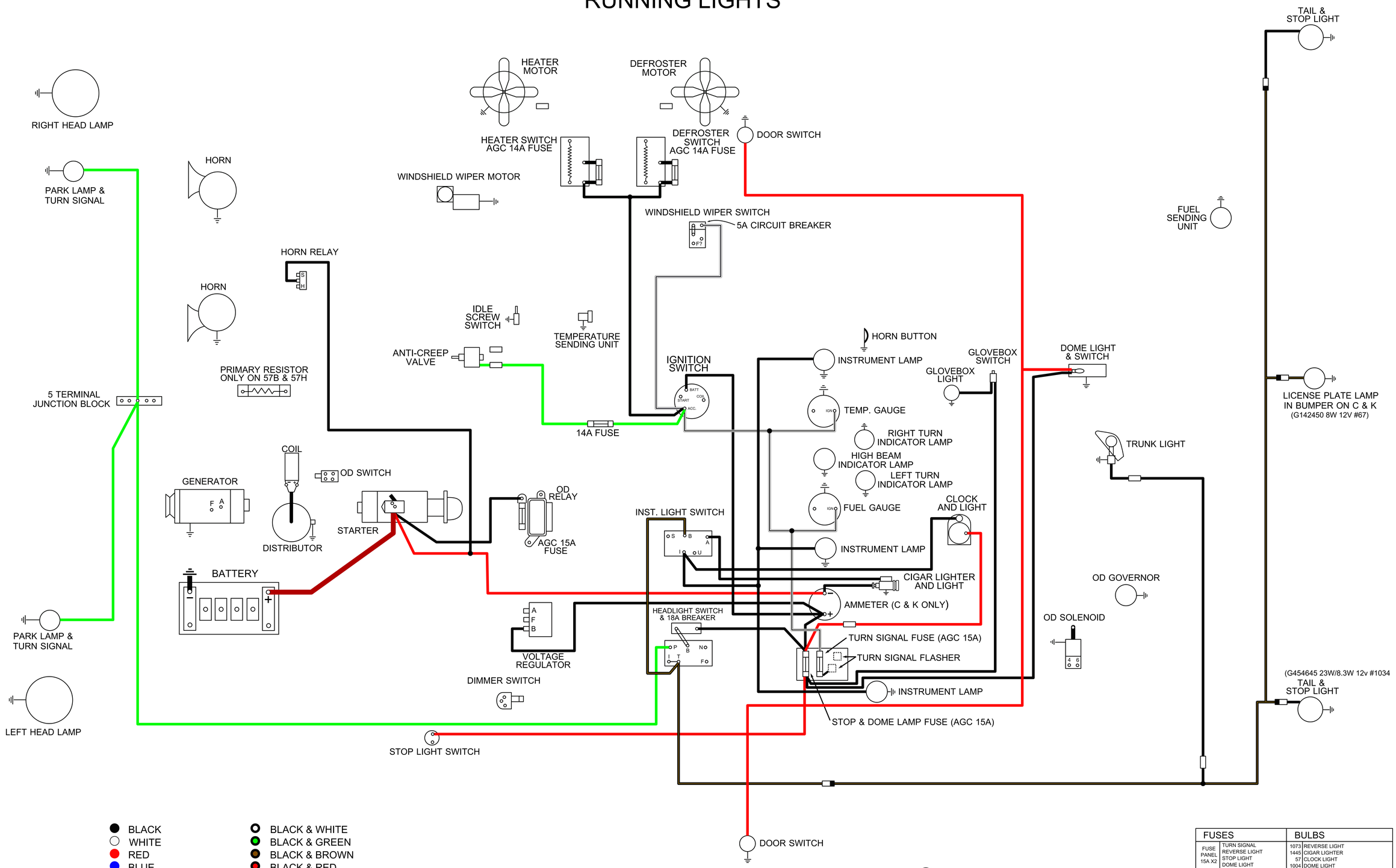

- BLACK
- WHITE
- RED
- BLUE
- GREEN
- LIGHT GREEN
- YELLOW
- TAN
- GRAY
- RED & BLACK
- RED & WHITE
- BLACK & WHITE
- BLACK & GREEN
- BLACK & BROWN
- BLACK & RED
- WHITE & BLACK
- WHITE & RED
- WHITE & GREEN
- WHITE & BROWN
- YELLOW & RED
- GREEN & BLACK

- CONNECTOR AS PART OF HARNESS
- 192548 LOOSE CONNECTOR
- FUSE
- GROUND CONNECTION
- RESISTOR

FUSES		BULBS	
FUSE PANEL 15A X2	TURN SIGNAL	1073	REVERSE LIGHT
	REVERSE LIGHT	1445	CIGAR LIGHTER
	STOP LIGHT	57	CLOCK LIGHT
	DOME LIGHT	1004	DOME LIGHT
7.5A	RADIO	57	GLOVE BOX LIGHT
14A	HEATER	4405	SPOTLIGHT
3A	CLOCK	1004	HANDBRAKE INDICATOR
4A	UNDERHOOD LIGHT	5400	HEADLIGHT SINGLE
14A	ANTI-CREEP	1445	HIGH BEAM INDICATOR
20A	AIR CON.	1445	IGN. LOCK LIGHT
15A	OVERDRIVE	57	INSTRUMENT LIGHTS
7.5A	SPOTLIGHT	67	LICENSE PLATE LIGHT
		1034	PARKING LIGHT
		1891	RADIO DIAL LIGHT
		1445	SHIFTER LIGHT
		1034	STOP LIGHT
		1034	TAIL LIGHT
		1445	TELL TALE LIGHTS
		67	TRUNK LIGHT
		1445	TURN SIGNAL INDICATOR
		1034	TURN SIGNAL FRONT
		1034	TURN SIGNAL REAR

CINCO

1957 STUDEBAKER SILVER HAWK (57H C)

BRAKE LIGHTS

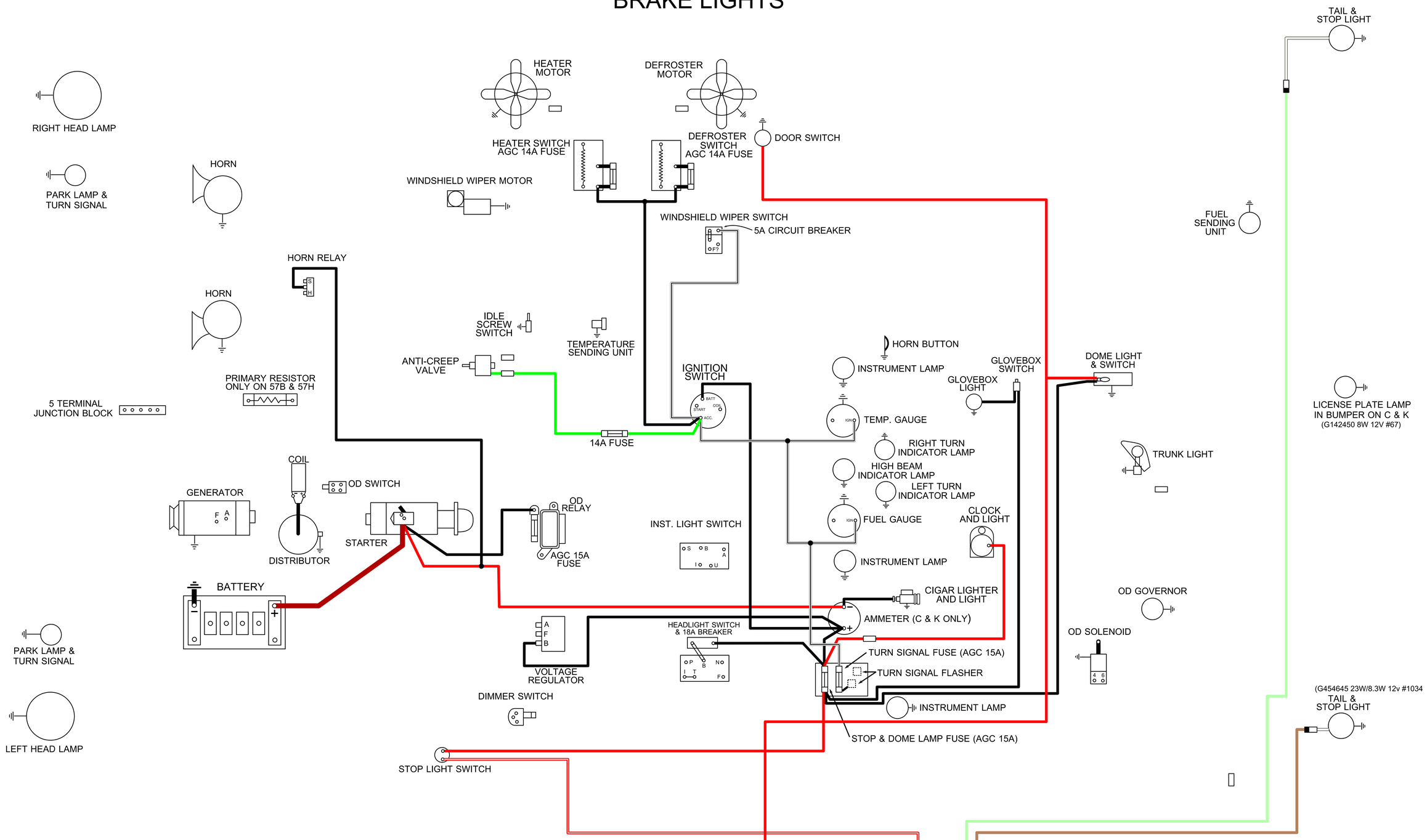

FUSES		BULBS	
FUSE PANEL 15A X2	TURN SIGNAL	1073	REVERSE LIGHT
	REVERSE LIGHT	1445	CIGAR LIGHTER
	STOP LIGHT	57	CLOCK LIGHT
	DOME LIGHT	1004	DOME LIGHT
7.5A	RADIO	57	GLOVE BOX LIGHT
14A	HEATER	4405	SPOTLIGHT
3A	CLOCK	1004	HANDBRAKE INDICATOR
4A	UNDERHOOD LIGHT	5400	HEADLIGHT SINGLE
14A	ANTI-CREEP	1445	HIGH BEAM INDICATOR
20A	AIR CON.	1445	IGN. LOCK LIGHT
15A	OVERDRIVE	57	INSTRUMENT LIGHTS
7.5A	SPOTLIGHT	67	LICENSE PLATE LIGHT
		1034	PARKING LIGHT
		1891	RADIO DIAL LIGHT
		1445	SHIFTER LIGHT
		1034	STOP LIGHT
		1034	TAIL LIGHT
		1445	TELL TALE LIGHTS
		67	TRUNK LIGHT
		1445	TURN SIGNAL INDICATOR
		1034	TURN SIGNAL FRONT
		1034	TURN SIGNAL REAR

CINCO

1957 STUDEBAKER SILVER HAWK (57H C)

TURN SIGNALS

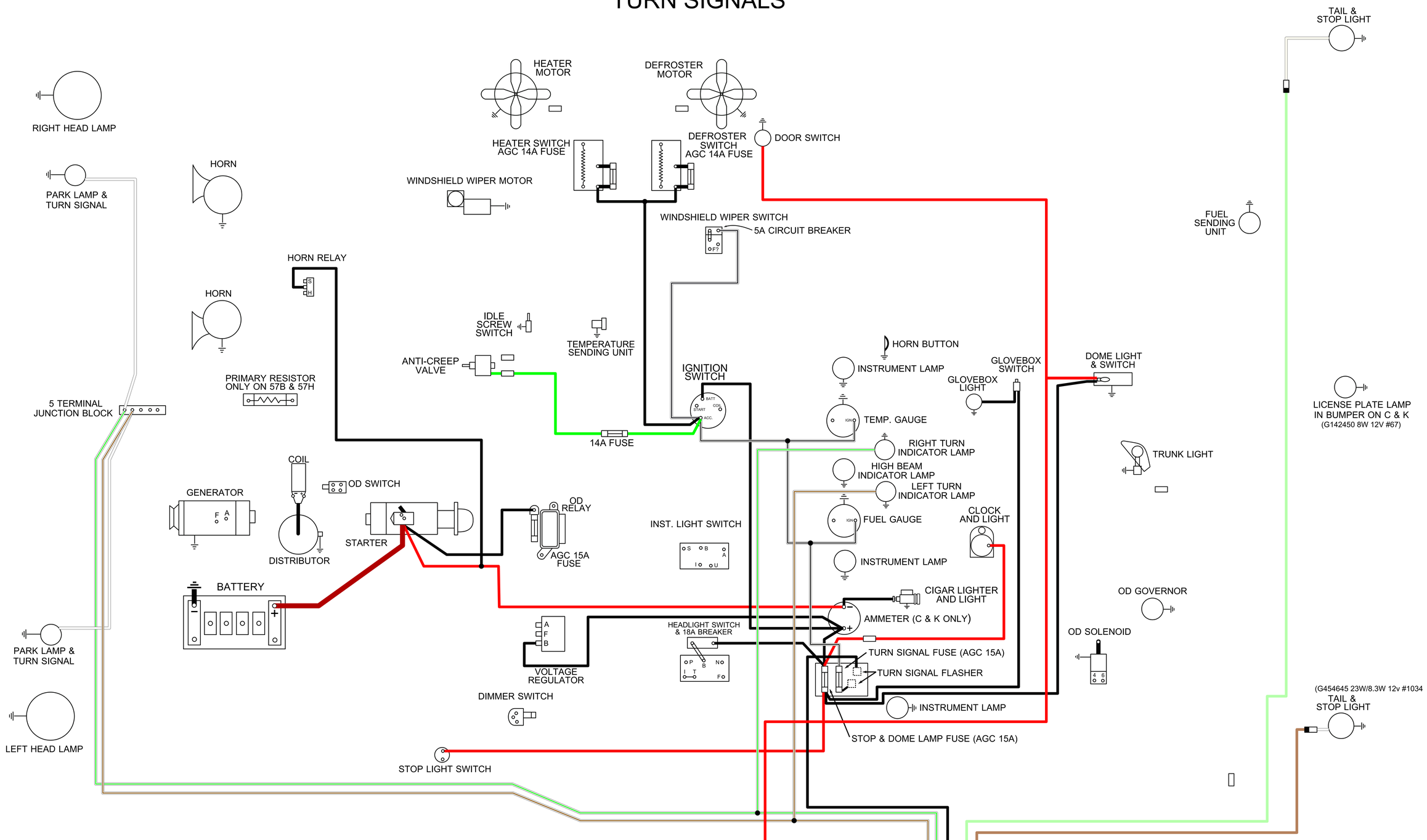

- BLACK
- WHITE
- RED
- BLUE
- GREEN
- LIGHT GREEN
- YELLOW
- TAN
- GRAY
- RED & BLACK
- RED & WHITE
- BLACK & WHITE
- BLACK & GREEN
- BLACK & BROWN
- BLACK & RED
- WHITE & BLACK
- WHITE & RED
- WHITE & GREEN
- WHITE & BROWN
- YELLOW & RED
- GREEN & BLACK

- CONNECTOR AS PART OF HARNESS
- 192548 LOOSE CONNECTOR
- FUSE
- GROUND CONNECTION
- RESISTOR

FUSES		BULBS	
FUSE PANEL 15A X2	TURN SIGNAL	1073	REVERSE LIGHT
	REVERSE LIGHT	1445	CIGAR LIGHTER
	STOP LIGHT	57	CLOCK LIGHT
	DOME LIGHT	1004	DOME LIGHT
7.5A	RADIO	57	GLOVE BOX LIGHT
14A	HEATER	4405	SPOTLIGHT
3A	CLOCK	1004	HANDBRAKE INDICATOR
4A	UNDERHOOD LIGHT	5400	HEADLIGHT SINGLE
14A	ANTI-CREEP	1445	HIGH BEAM INDICATOR
20A	AIR CON.	1445	IGN. LOCK LIGHT
15A	OVERDRIVE	57	INSTRUMENT LIGHTS
7.5A	SPOTLIGHT	67	LICENSE PLATE LIGHT
		1034	PARKING LIGHT
		1891	RADIO DIAL LIGHT
		1445	SHIFTER LIGHT
		1034	STOP LIGHT
		1034	TAIL LIGHT
		1445	TELL TALE LIGHTS
		67	TRUNK LIGHT
		1445	TURN SIGNAL INDICATOR
		1034	TURN SIGNAL FRONT
		1034	TURN SIGNAL REAR

CINCO

1957 STUDEBAKER SILVER HAWK (57H C)

WIPERS

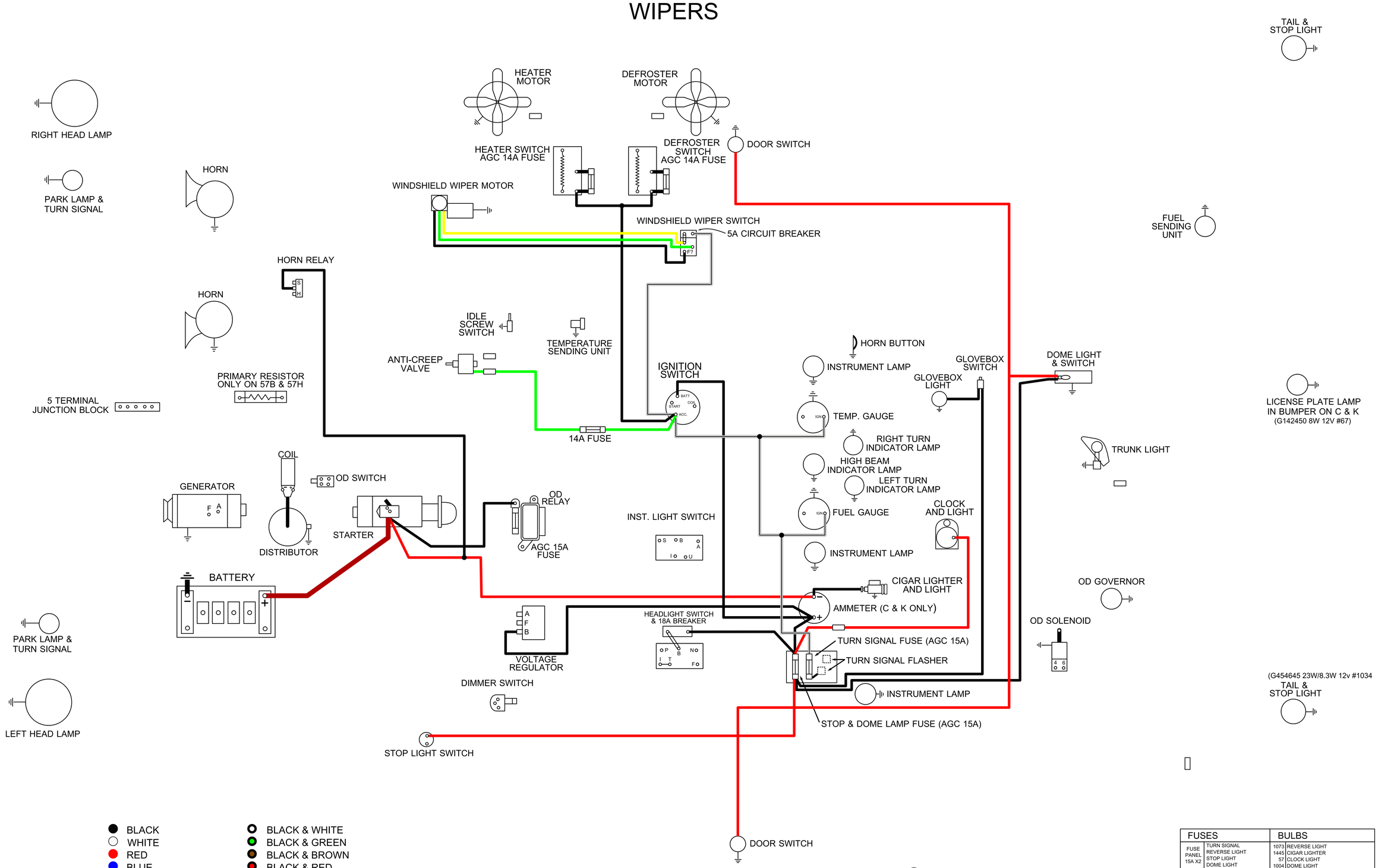

FUSES		BULBS	
FUSE PANEL 15A X2	TURN SIGNAL REVERSE LIGHT STOP LIGHT DOME LIGHT	1073	REVERSE LIGHT
		1445	CIGAR LIGHTER
		57	CLOCK LIGHT
		1004	DOME LIGHT
7.5A	RADIO	57	GLOVE BOX LIGHT
14A	HEATER	4405	SPOTLIGHT
3A	CLOCK	1004	HANDBRAKE INDICATOR
4A	UNDERHOOD LIGHT	5400	HEADLIGHT SINGLE
14A	ANTI-CREEP	1445	HIGH BEAM INDICATOR
20A	AIR CON.	1445	IGN. LOCK LIGHT
15A	OVERDRIVE	57	INSTRUMENT LIGHTS
7.5A	SPOTLIGHT	67	LICENSE PLATE LIGHT
		1034	PARKING LIGHT
		1891	RADIO DIAL LIGHT
		1445	SHIFTER LIGHT
		1034	STOP LIGHT
		1034	TAIL LIGHT
		1445	TELL TALE LIGHTS
		67	TRUNK LIGHT
		1445	TURN SIGNAL INDICATOR
		1034	TURN SIGNAL FRONT
		1034	TURN SIGNAL REAR

CINCO

1957 STUDEBAKER SILVER HAWK (57H C)

HEATER

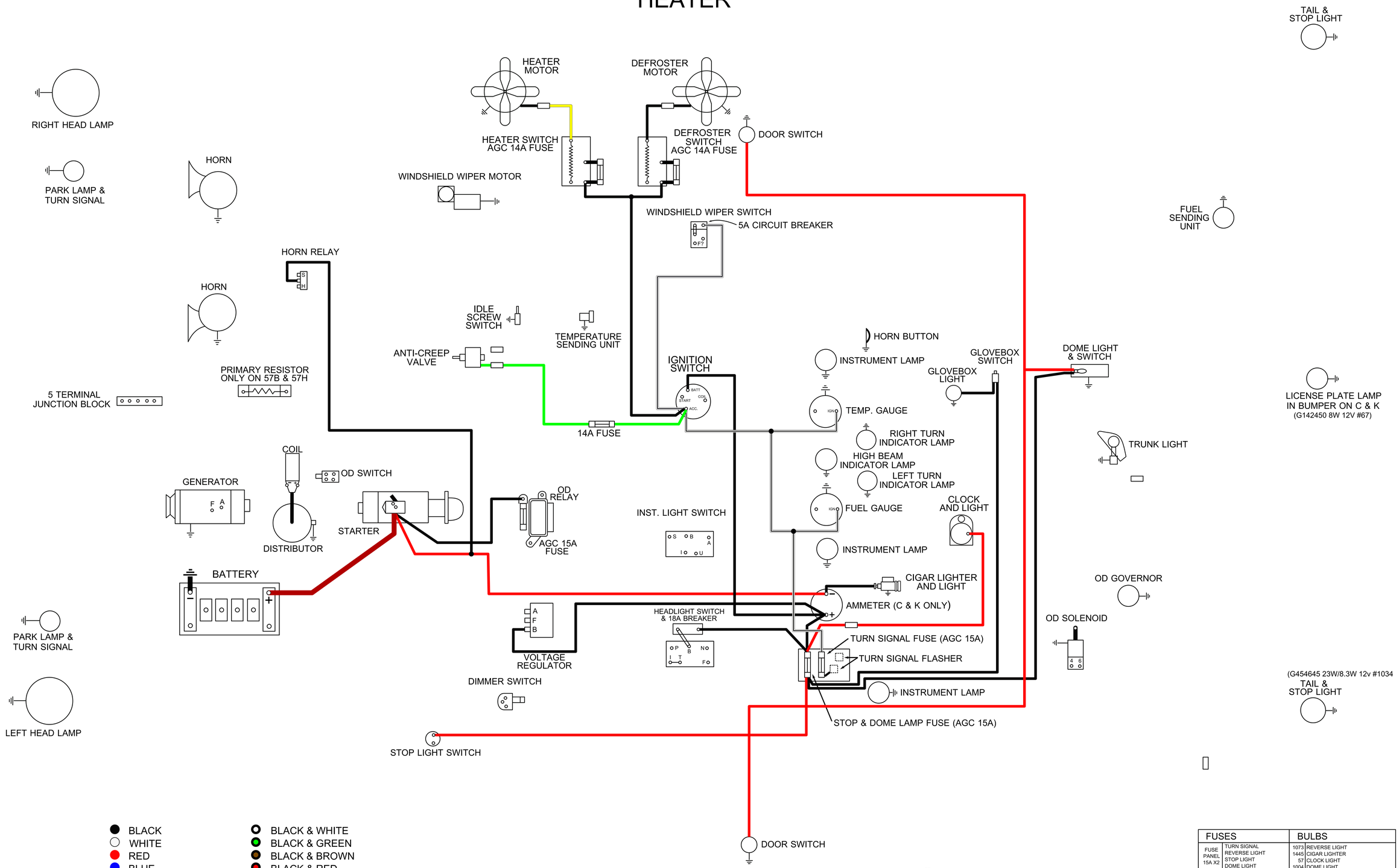

FUSES		BULBS	
FUSE PANEL 15A X2	TURN SIGNAL	1073	REVERSE LIGHT
	REVERSE LIGHT	1445	CIGAR LIGHTER
	STOP LIGHT	57	CLOCK LIGHT
	DOME LIGHT	1004	DOME LIGHT
7.5A	RADIO	57	GLOVE BOX LIGHT
14A	HEATER	4405	SPOTLIGHT
3A	CLOCK	1004	HANDBRAKE INDICATOR
4A	UNDERHOOD LIGHT	5400	HEADLIGHT SINGLE
14A	ANTI-CREEP	1445	HIGH BEAM INDICATOR
20A	AIR CON.	1445	IGN. LOCK LIGHT
15A	OVERDRIVE	57	INSTRUMENT LIGHTS
7.5A	SPOTLIGHT	67	LICENSE PLATE LIGHT
		1034	PARKING LIGHT
		1891	RADIO DIAL LIGHT
		1445	SHIFTER LIGHT
		1034	STOP LIGHT
		1034	TAIL LIGHT
		1445	TELL TALE LIGHTS
		67	TRUNK LIGHT
		1445	TURN SIGNAL INDICATOR
		1034	TURN SIGNAL FRONT
		1034	TURN SIGNAL REAR

CINCO

1957 STUDEBAKER SILVER HAWK (57H C)

ANTI-CREEP

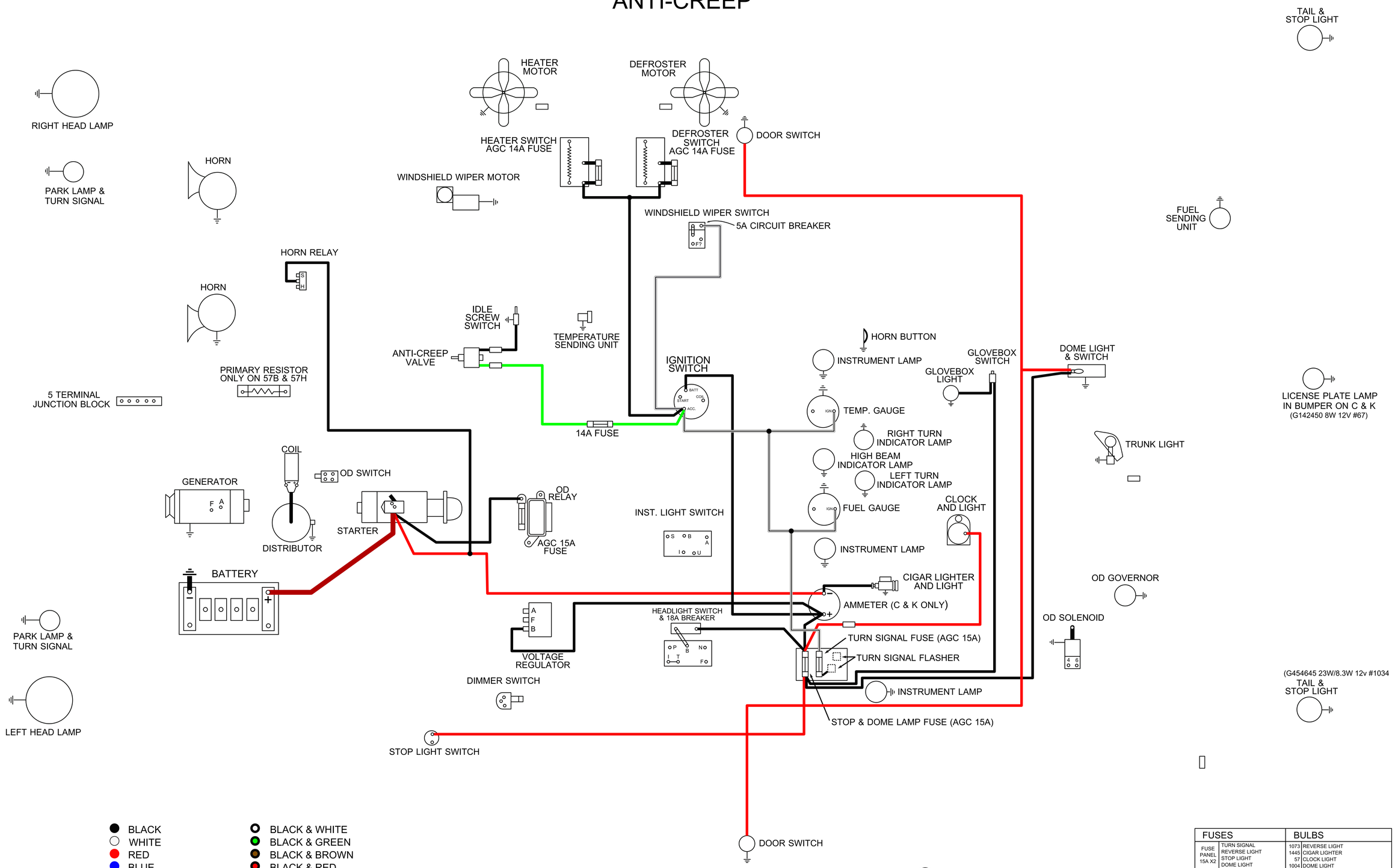

- BLACK
- WHITE
- RED
- BLUE
- GREEN
- LIGHT GREEN
- YELLOW
- TAN
- GRAY
- RED & BLACK
- RED & WHITE
- BLACK & WHITE
- BLACK & GREEN
- BLACK & BROWN
- BLACK & RED
- WHITE & BLACK
- WHITE & RED
- WHITE & GREEN
- WHITE & BROWN
- YELLOW & RED
- GREEN & BLACK

- CONNECTOR AS PART OF HARNESS
- 192548 LOOSE CONNECTOR
- FUSE
- GROUND CONNECTION
- RESISTOR

FUSES		BULBS	
FUSE PANEL 15A X2	TURN SIGNAL	1073	REVERSE LIGHT
	REVERSE LIGHT	1445	CIGAR LIGHTER
	STOP LIGHT	57	CLOCK LIGHT
	DOME LIGHT	1004	DOME LIGHT
7.5A	RADIO	57	GLOVE BOX LIGHT
14A	HEATER	4405	SPOTLIGHT
3A	CLOCK	1004	HANDBRAKE INDICATOR
4A	UNDERHOOD LIGHT	5400	HEADLIGHT SINGLE
14A	ANTI-CREEP	1445	HIGH BEAM INDICATOR
20A	AIR CON.	1445	IGN. LOCK LIGHT
15A	OVERDRIVE	57	INSTRUMENT LIGHTS
7.5A	SPOTLIGHT	67	LICENSE PLATE LIGHT
		1034	PARKING LIGHT
		1891	RADIO DIAL LIGHT
		1445	SHIFTER LIGHT
		1034	STOP LIGHT
		1034	TAIL LIGHT
		1445	TELL TALE LIGHTS
		67	TRUNK LIGHT
		1445	TURN SIGNAL INDICATOR
		1034	TURN SIGNAL FRONT
		1034	TURN SIGNAL REAR

CINCO

1957 STUDEBAKER SILVER HAWK (57H C)

HORN

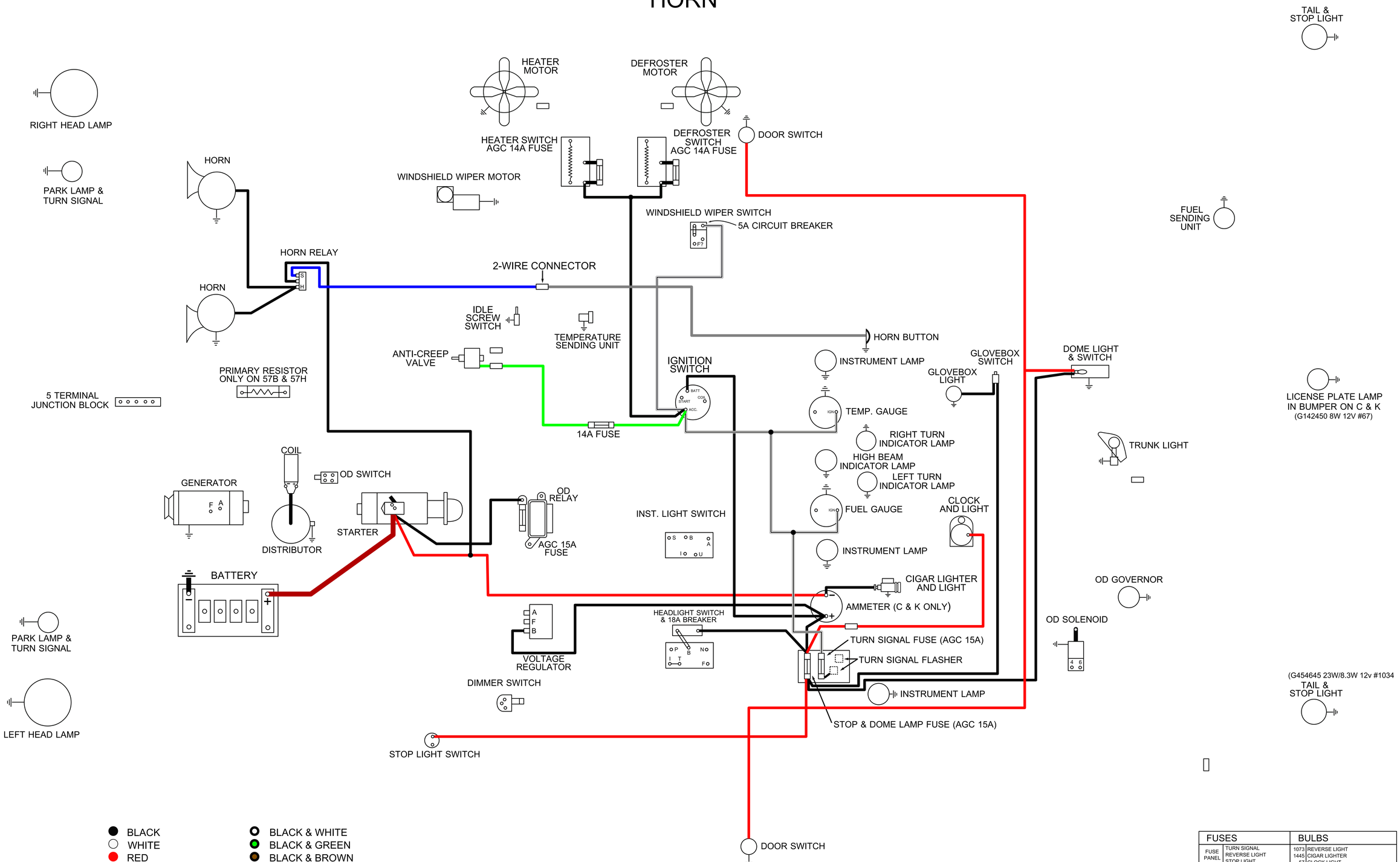

- BLACK
- WHITE
- RED
- BLUE
- GREEN
- LIGHT GREEN
- YELLOW
- TAN
- GRAY
- RED & BLACK
- RED & WHITE
- BLACK & WHITE
- BLACK & GREEN
- BLACK & BROWN
- BLACK & RED
- WHITE & BLACK
- WHITE & RED
- WHITE & GREEN
- WHITE & BROWN
- YELLOW & RED
- GREEN & BLACK

- CONNECTOR AS PART OF HARNESS
- 192548 LOOSE CONNECTOR
- FUSE
- GROUND CONNECTION
- RESISTOR

FUSES		BULBS	
FUSE PANEL 15A X2	TURN SIGNAL	1073	REVERSE LIGHT
	REVERSE LIGHT	1445	CIGAR LIGHTER
	STOP LIGHT	57	CLOCK LIGHT
	DOME LIGHT	1004	DOME LIGHT
7.5A	RADIO	57	GLOVE BOX LIGHT
14A	HEATER	4405	SPOTLIGHT
3A	CLOCK	1004	HANDBRAKE INDICATOR
4A	UNDERHOOD LIGHT	5400	HEADLIGHT SINGLE
14A	ANTI-CREEP	1445	HIGH BEAM INDICATOR
20A	AIR CON.	1445	IGN. LOCK LIGHT
15A	OVERDRIVE	57	INSTRUMENT LIGHTS
7.5A	SPOTLIGHT	67	LICENSE PLATE LIGHT
		1034	PARKING LIGHT
		1891	RADIO DIAL LIGHT
		1445	SHIFTER LIGHT
		1034	STOP LIGHT
		1034	TAIL LIGHT
		1445	TELL TALE LIGHTS
		67	TRUNK LIGHT
		1445	TURN SIGNAL INDICATOR
		1034	TURN SIGNAL FRONT
		1034	TURN SIGNAL REAR

CINCO

1957 STUDEBAKER SILVER HAWK (57H C)

OVERDRIVE

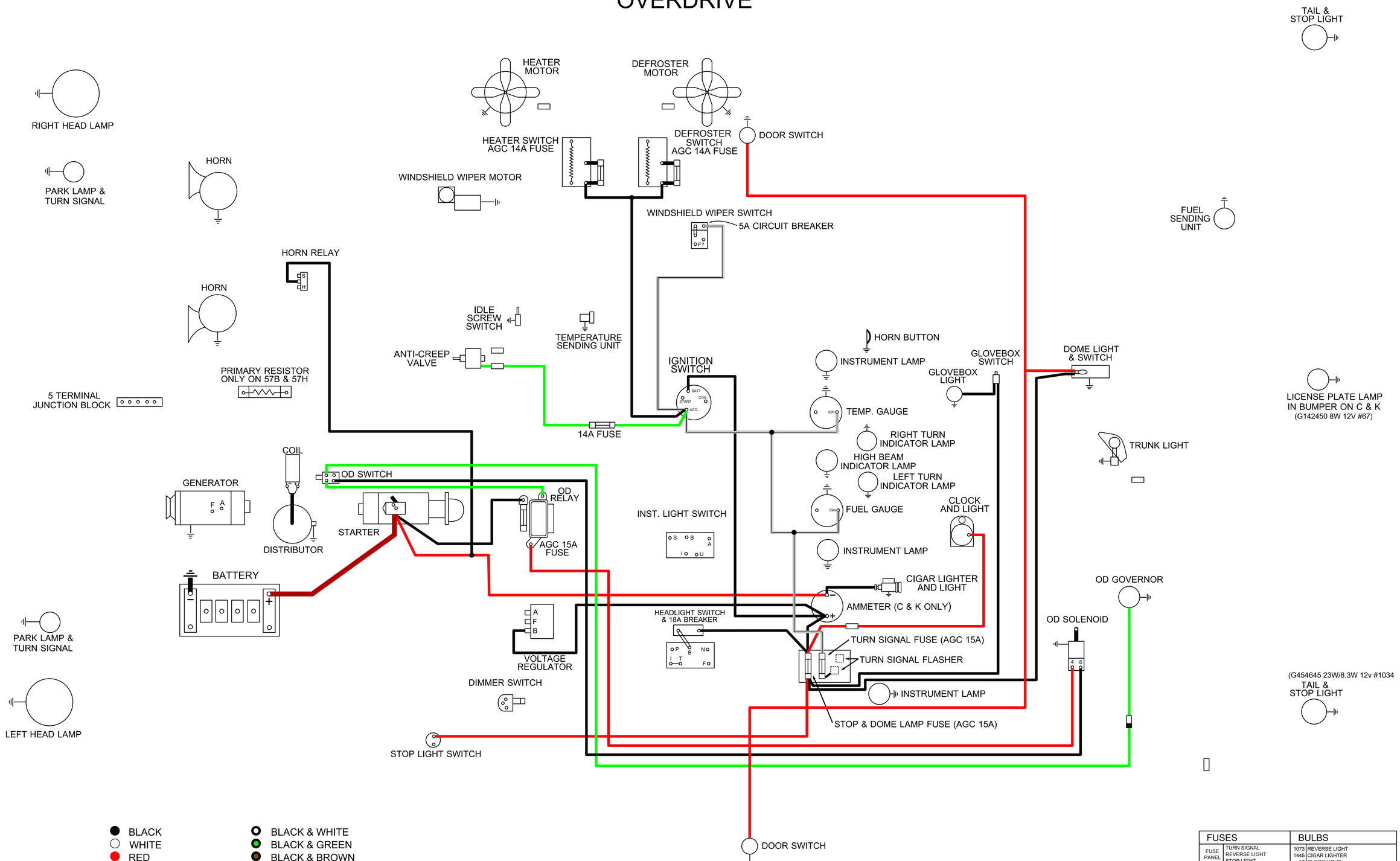

- BLACK
- WHITE
- RED
- BLUE
- GREEN
- LIGHT GREEN
- YELLOW
- TAN
- GRAY
- RED & BLACK
- RED & WHITE
- BLACK & WHITE
- BLACK & GREEN
- BLACK & BROWN
- BLACK & RED
- WHITE & BLACK
- WHITE & RED
- WHITE & GREEN
- WHITE & BROWN
- YELLOW & RED
- GREEN & BLACK

- CONNECTOR AS PART OF HARNESS
- 192548 LOOSE CONNECTOR
- FUSE
- GROUND CONNECTION
- RESISTOR

FUSES		BULBS	
FUSE PANEL 15A X2	TURN SIGNAL	1073	REVERSE LIGHT
	REVERSE LIGHT	1445	CIGAR LIGHTER
	STOP LIGHT	57	CLOCK LIGHT
	DOME LIGHT	1004	DOME LIGHT
7.5A	RADIO	57	GLOVE BOX LIGHT
14A	HEATER	4405	SPOTLIGHT
3A	CLOCK	1004	HANDBRAKE INDICATOR
4A	UNDERHOOD LIGHT	5400	HEADLIGHT SINGLE
14A	ANTI-CREEP	1445	HIGH BEAM INDICATOR
20A	AIR CON.	1445	IGN. LOCK LIGHT
15A	OVERDRIVE	57	INSTRUMENT LIGHTS
7.5A	SPOTLIGHT	67	LICENSE PLATE LIGHT
		1034	PARKING LIGHT
		1891	RADIO DIAL LIGHT
		1445	SHIFTER LIGHT
		1034	STOP LIGHT
		1034	TAIL LIGHT
		1445	TELL TALE LIGHTS
		67	TRUNK LIGHT
		1445	TURN SIGNAL INDICATOR
		1034	TURN SIGNAL FRONT
		1034	TURN SIGNAL REAR

CINCO

1957 STUDEBAKER SILVER HAWK (57H C)

GAUGES

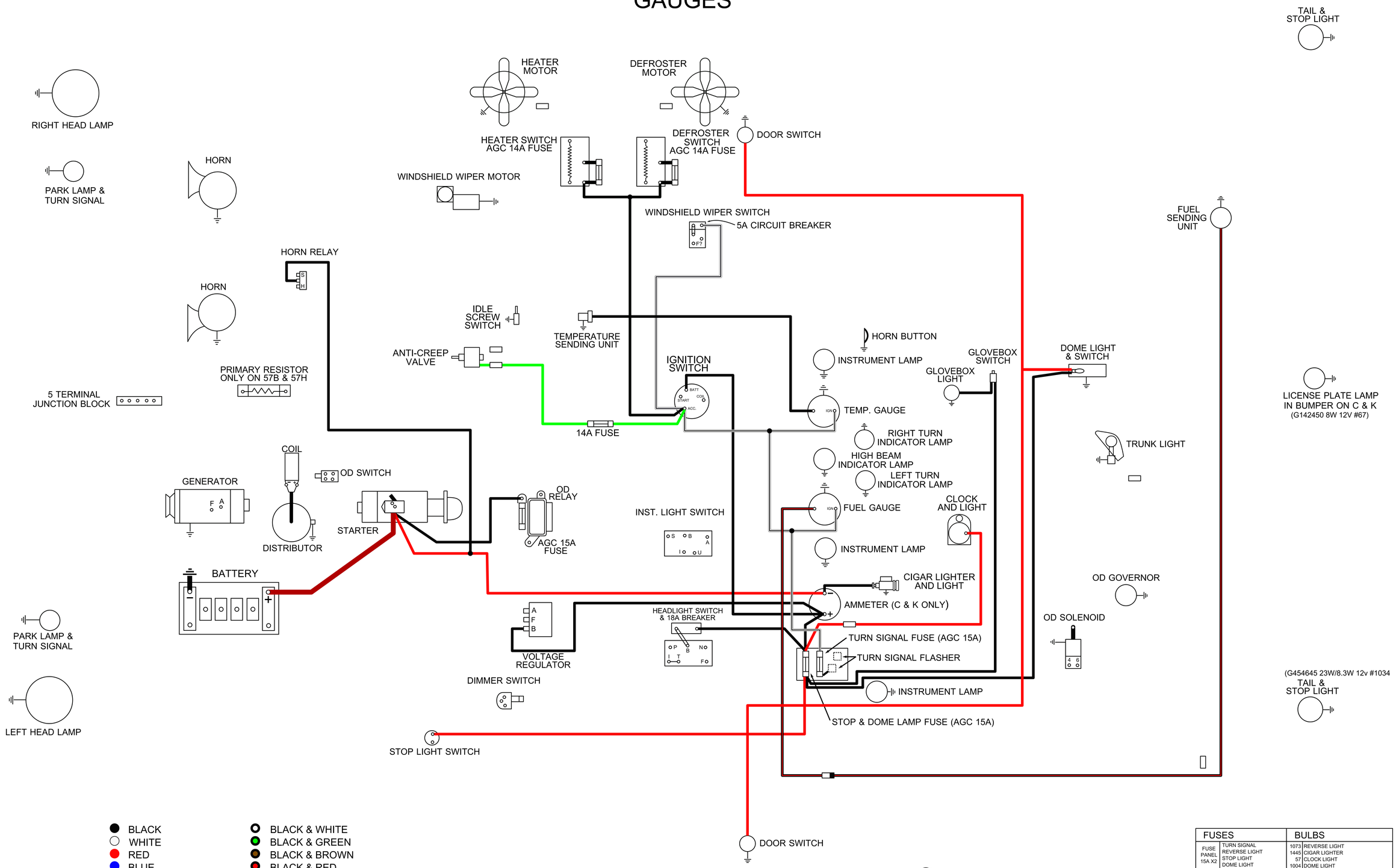

- BLACK
- WHITE
- RED
- BLUE
- GREEN
- LIGHT GREEN
- YELLOW
- TAN
- GRAY
- RED & BLACK
- RED & WHITE
- BLACK & WHITE
- BLACK & GREEN
- BLACK & BROWN
- BLACK & RED
- WHITE & BLACK
- WHITE & RED
- WHITE & GREEN
- WHITE & BROWN
- YELLOW & RED
- GREEN & BLACK

- CONNECTOR AS PART OF HARNESS
- 192548 LOOSE CONNECTOR
- FUSE
- GROUND CONNECTION
- RESISTOR

FUSES		BULBS	
FUSE PANEL 15A X2	TURN SIGNAL	1073	REVERSE LIGHT
	REVERSE LIGHT	1445	CIGAR LIGHTER
	STOP LIGHT	57	CLOCK LIGHT
	DOME LIGHT	1004	DOME LIGHT
7.5A	RADIO	57	GLOVE BOX LIGHT
14A	HEATER	4405	SPOTLIGHT
3A	CLOCK	1004	HANDBRAKE INDICATOR
4A	UNDERHOOD LIGHT	5400	HEADLIGHT SINGLE
14A	ANTI-CREEP	1445	HIGH BEAM INDICATOR
20A	AIR CON.	1445	IGN. LOCK LIGHT
15A	OVERDRIVE	57	INSTRUMENT LIGHTS
7.5A	SPOTLIGHT	67	LICENSE PLATE LIGHT
		1034	PARKING LIGHT
		1891	RADIO DIAL LIGHT
		1445	SHIFTER LIGHT
		1034	STOP LIGHT
		1034	TAIL LIGHT
		1445	TELL TALE LIGHTS
		67	TRUNK LIGHT
		1445	TURN SIGNAL INDICATOR
		1034	TURN SIGNAL FRONT
		1034	TURN SIGNAL REAR

CINCO